PROFILE

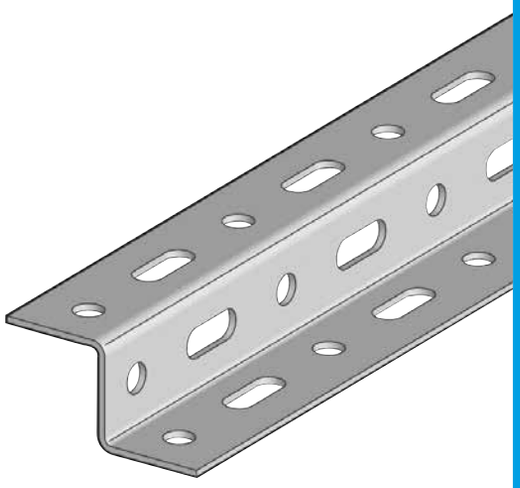

Flat piece ..... p. 204

L profile ..... p. 205

U profile ..... p. 206

Z profile ..... p. 210

Ω profile & Distance support ..... p. 210

A603 profile ..... p. 211

FLAT PIECE

A 521 FLAT PIECE - 3M

	m	Description	Code	Weight kg/ml	Th. mm
G	3	PL A521 25x3.00 6.5x30 3M G	**013050**	0.500	3.00
	3	PL A521 30x3.00 6.5x30 3M G	**013051**	0.620	3.00
	3	PL A521 30x3.00 9x30 3M G	**013052**	0.590	3.00
	3	PL A521 30x4.00 6.5x30 3M G	**013053**	0.820	4.00
	3	PL A521 40x4.0 Q6.5x30 3M G	**013054**	1.020	4.00

	m	Description	Code	Weight kg/ml	Th. mm
HDG	3	PL A521 25x3.00 6.5x30 3M HDG	**013150**	0.520	3.00
	3	PL A521 30x3.00 6.5x30 3M HDG	**013151**	0.640	3.00
	3	PL A521 30x3.00 9x30 3M HDG	**013152**	0.610	3.00
	3	PL A521 30x4.00 6.5x30 3M HDG	**013153**	0.850	4.00
	3	PL A521 40x4.0 Q6.5x30 3M HDG	**013154**	1.050	4.00

	m	Description	Code	Weight kg/ml	Th. mm
SS304L	3	PL A521 30x3.00 6.5x30 3M SS304L	**313051**	0.620	3.00

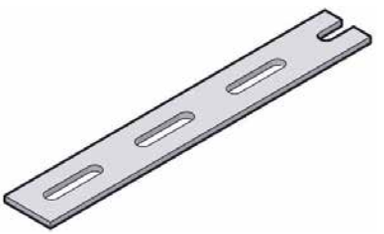

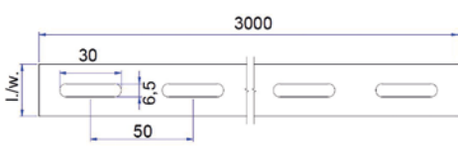

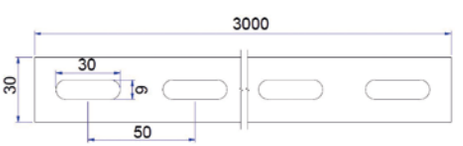

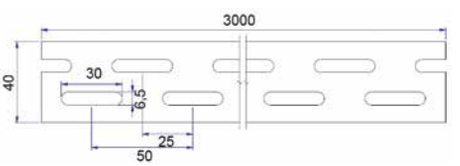

A 523 FLAT PIECE - 3M

	m	Description	Code	Weight kg/ml	Th. mm
G	3	PL A523 24x1.75 3M G	**013251**	0.270	1.75
	3	PL A523 48x1.75 3M G	**013254**	0.550	1.75
	3	PL A523 72x1.75 3M G	**013257**	0.820	1.75
	3	PL A523 96x1.75 3M G	**013260**	1.090	1.75

	m	Description	Code	Weight kg/ml	Th. mm
HDG	3	PL A523 48x1.80 3M HDG	**086634**	0.600	1.75
	3	PL A523 72x1.80 3M HDG	**085712**	0.900	1.75
	3	PL A523 96x1.80 3M HDG	**013360**	1.200	1.75

	m	Description	Code	Weight kg/ml	Th. mm
SS304L	3	PL A523 96x1.20 3M SS304L	**313259**	0.760	1.20

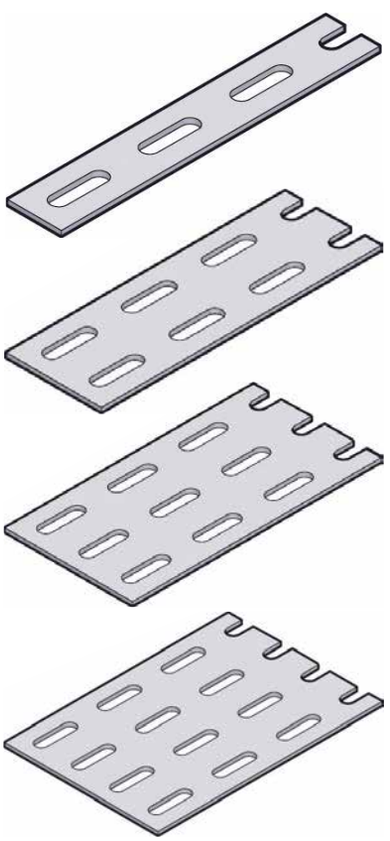

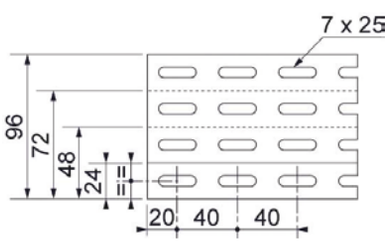

L PROFILE

A 560 L PROFILE - 3M

	m	Description	Code	Weight kg/ml	Th. mm
G	3	L A560 24x24x1.75 3M G	**014051**	0.547	1.75
	3	L A560 24x48x1.75 3M G	**014054**	0.821	1.75
	3	L A560 48x48x1.75 3M G	**014057**	1.095	1.75

	m	Description	Code	Weight kg/ml	Th. mm
HDG	3	L A560 24x24x1.80 3M HDG	**014151**	0.602	1.75
	3	L A560 24x48x1.80 3M HDG	**014154**	0.900	1.75
	3	L A560 48x48x1.80 3M HDG	**014157**	1.200	1.75

	m	Description	Code	Weight kg/ml	Th. mm
SS304L	3	L A560 24x24x1.50 3M SS304L	**314051**	0.478	1.50
	3	L A560 24x48x1.50 3M SS304L	**314054**	0.710	1.50
	3	L A560 48x48x1.50 3M SS304L	**314057**	0.956	1.50

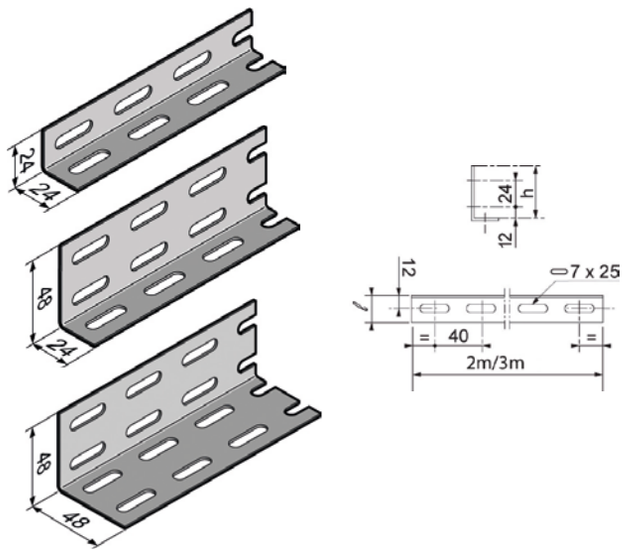

A 561 L PROFILE - 3M

	m	Description	Code	Weight kg/ml	Th. mm
G	3	LQ A561 24x48x1.75 3M G	**014250**	0.710	1.75
	3	LQ A561 48x48x1.75 3M G	**014252**	0.940	1.75

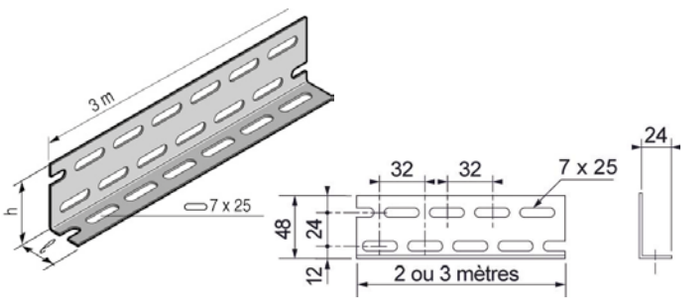

A 562 L PROFILE - 2M

	m	Description	Code	Weight kg/ml	Th. mm
G	2	L A562 30x30x1.50 2M G	**014300**	0.600	1.50

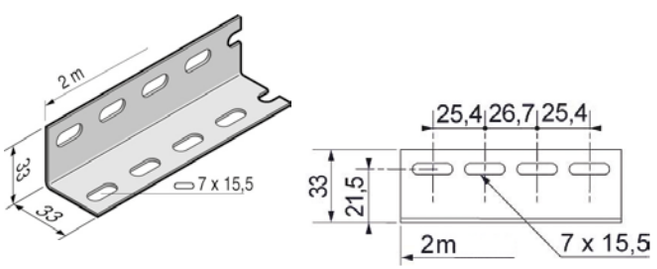

A 565 L PROFILE - 3M

	m	Description	Code	Weight kg/ml	Th. mm
G	3	L A565 40x40x1.75 3M G	**014350**	0.910	1.75

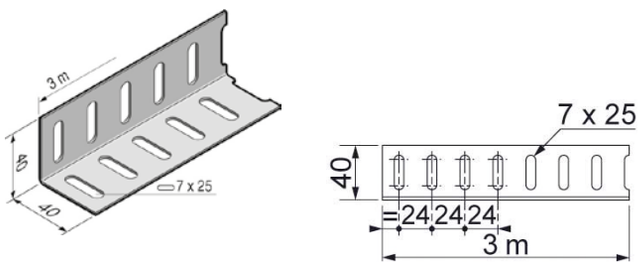

U PROFILE

UPS A540 - 3 M

	m	Description	Code	Weight kg/ml	Th. mm	H. mm	W mm
G	3	UPS A540 24x27x1.00 3M G	**015001**	0.560	1.00	25	24
	3	UPS A540 48x27x1.00 3M G	**015015**	0.734	1.00	25	48
	3	UPS A540 48x51x1.00 3M G	**015019**	1.047	1.00	49	48

	m	Description	Code	Weight kg/ml	Th. mm	H. mm	W mm
HDG	3	UPS A540 24x27x1.20 3M HDG	**015050**	0.763	1.20	25	24
	3	UPS A540 48x27x1.20 3M HDG	**015054**	0.969	1.20	25	48
	3	UPS A540 48x51x1.20 3M HDG	**015058**	1.382	1.20	49	48

	m	Description	Code	Weight kg/ml	Th. mm	H. mm	W mm
SS304L	3	UPS A540 24x27x0.80 3M SS304L	**315001**	0.466	0.80	25	24

	m	Description	Code	Weight kg/ml	Th. mm	H. mm	W mm
AL	3	UPS A540 24x27x1,20 AL	**515101**	0.235	1.20	25	24

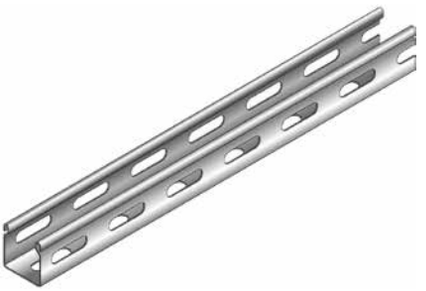

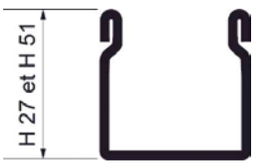

COK 27 COVER FOR UPS SECTIONS

- Clip-on system: covers the whole height of the profile
- Other dimensions on request

	m	Description	Code	Weight kg/ml	Th. mm
G	2	COK 27 G	**005450**	0.424	0.75

Standard length: 2 m

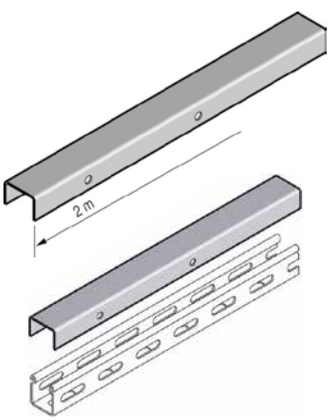

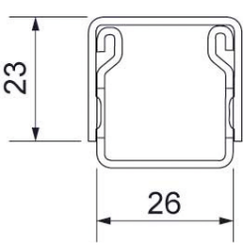

CO2 27 COVER FOR UPS SECTIONS

	m	Description	Code	Weight kg/ml	Th. mm
G	2	CO2 27 G	**005000**	0.253	0.60

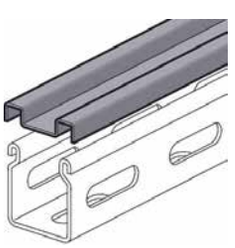

U PROFILE

UD A540 - 3M

	m	Description	Code	Weight kg/ml	Th. mm	H. mm	W mm
G	3	UD A540 24x24x1.75 3M G	**015003**	0.990	1.75	24	24
	3	UD A540 48x48x1.75 3M G	**015011**	1.650	1.75	48	48

	m	Description	Code	Weight kg/ml	Th. mm	H. mm	W mm
HDG	3	UD A540 24x24x1.80 3M HDG	**015051**	0.900	1.75	24	24
	3	UD A540 48x48x1.80 3M HDG	**015059**	1.800	1.75	48	48

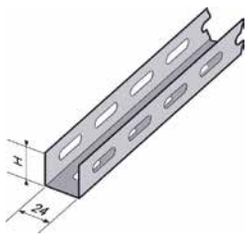

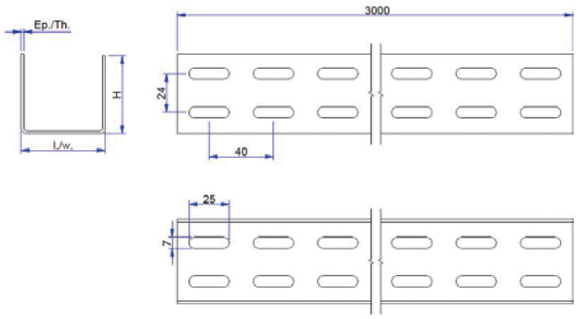

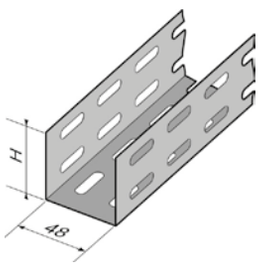

UP A540 - 3M

	m	Description	Code	Weight Kg/ml	Th. mm	H. mm	W mm
G	3	UP A540 24x24x1.50 3M G	**015002**	0.797	1.50	25	24
	3	UP A540 48x24x1.50 3M G	**015006**	1.031	1.50	25	48
	3	UP A540 48x48x1.00 3M G	**015010**	1.016	1.00	49	48

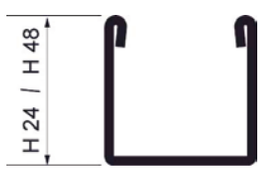

U A541 - 2M

	m	Description	Code	Weight kg/ml	Th. mm	H. mm	W mm
G	2	U A541 32x13x1.25 2M G	■ **015200**	0.560	1.25	14	35

32mm= internal width
12.5mm = internal height

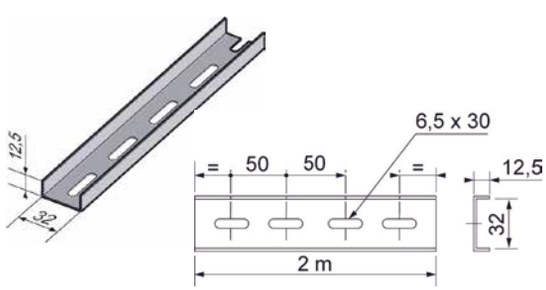

U A542 - 2M

	m	Description	Code	Weight kg/ml	Th. mm	H. mm	W mm
G	2	U A542 44x14x2.00 2M G	**015201**	1.020	2.00	16	48

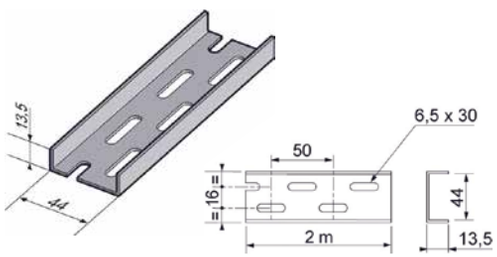

U PROFILE

U A543 - 2M

	m	Description	Code	Weight kg/ml	Th. mm	H. mm	W mm
G	2	U A543 30x15x1.50 2M G	**015205**	0.530	1.50	15	30

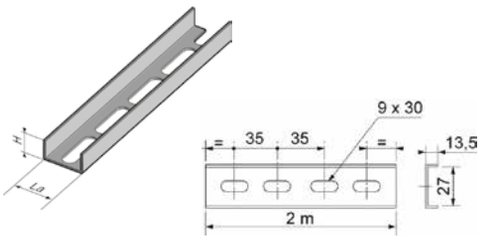

U A565 - 3M

	m	Description	Code	Weight kg/ml	Th. mm	H. mm	W mm
G	3	U A565 40x40x1.75 3M G	**015202**	1.360	1.75	42	44

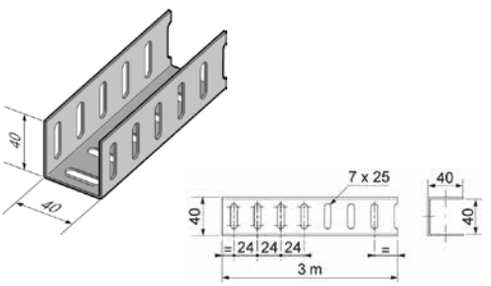

U A580 - 3M

	m	Description	Code	Weight kg/ml	Th. mm	H. mm	W mm
G	3	U A580 52x26x1.75 3M G	**015204**	1.260	1.75	26	51

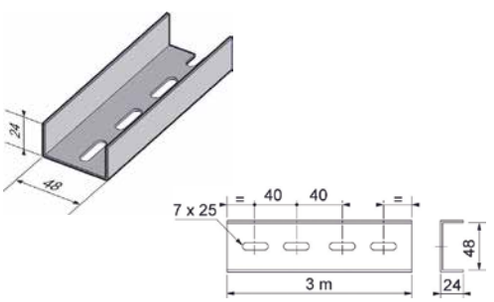

U A585 -3M

	m	Description	Code	Weight kg/ml	Th. mm	H. mm	W mm
G	3	U A585 44x42x1.75 3M G	**015203**	1.370	1.75	42	44

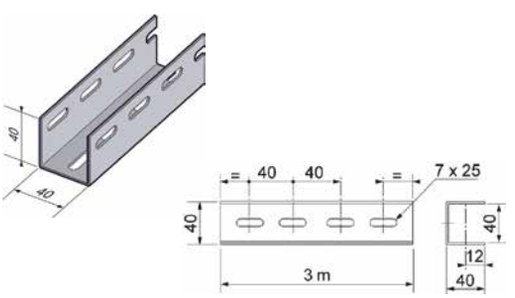

U 35X13,5 - 3M

	m	Description	Code	Weight kg/ml	Th. mm	H. mm
G	3	U 35 13.5x2.00 3M G	**015206**	0.790	2.00	14

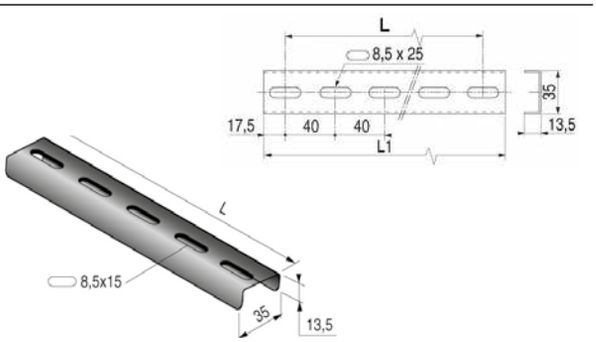

U PROFILE

PERFORATED UPN 30

	m	Description	Code	Weight kg/ml	Th. mm
LAC	3	UPN 15x30x15 3M LAC	**641006**	1.490	4.00
	6	UPN 15x30x15 6M LAC	**641001**	1.490	4.00

	m	Description	Code	Weight kg/ml	Th. mm
HDG	3	UPN 15x30x15 3M HDG	**642006**	1.638	4.00
	6	UPN 15x30x15 6M HDG	**642001**	1.638	4.00

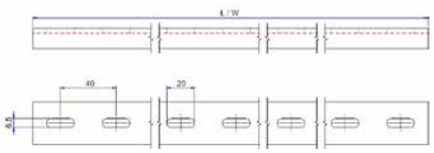

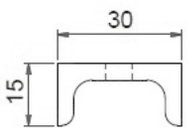

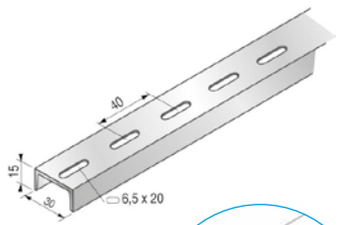

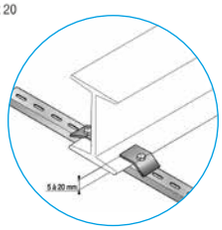

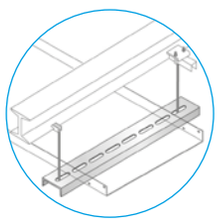

PERFORATED UPN 40

	m	Description	Code	Weight kg/ml	Th. mm
LAC	3	UPN 20x40x20 3M LAC	**641003**	2.420	5.00
	6	UPN 20x40x20 6M LAC	**641002**	2.420	5.00

	m	Description	Code	Weight kg/ml	Th. mm
HDG	3	UPN 20x40x20 3M HDG	**642003**	2.660	5.00
	6	UPN 20x40x20 6M HDG	**642002**	2.660	5.00

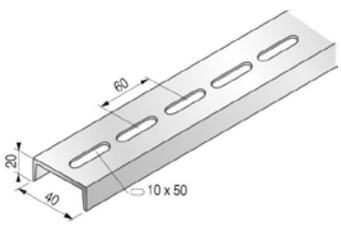

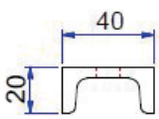

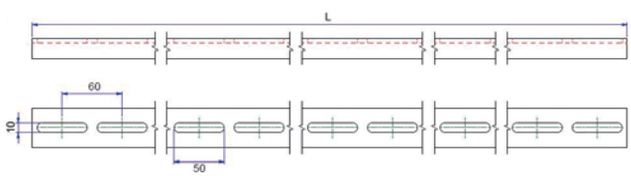

PERFORATED UPN 60

	m	Description	Code	Weight kg/ml	Th. mm
LAC	3	UPN 30x60x30 3M LAC	**641007**	4.220	6.00
	6	UPN 30x60x30 6M LAC	**641004**	4.220	6.00

	m	Description	Code	Weight kg/ml	Th. mm
HDG	3	UPN 30x60x30 3M HDG	**642007**	4.647	6.00
	6	UPN 30x60x30 6M HDG	**642004**	4.647	6.00

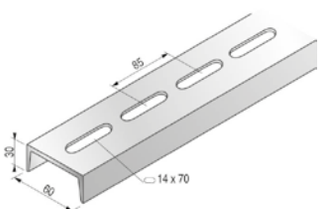

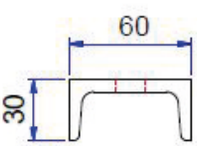

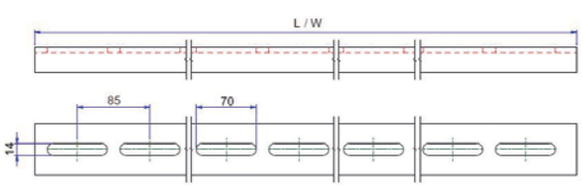

PERFORATED UPN 80

	m	Description	Code	Weight kg/ml	Th. mm
LAC	3	UPN 45x80x45 3M LAC	**641008**	6.870	6.00
	6	UPN 45x80x45 6M LAC	**641005**	6.870	6.00

	m	Description	Code	Weight kg/ml	Th. mm
HDG	3	UPN 45x80x45 3M HDG	**642008**	7.557	6.00
	6	UPN 45x80x45 6M HDG	**642005**	7.557	6.00

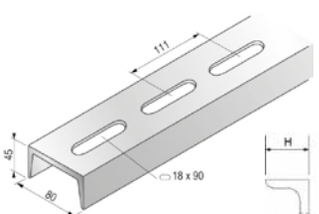

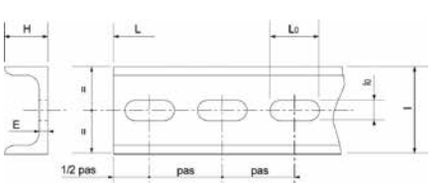

Z PROFILE

Z A570 - 3M

	m	Description	Code	Weight kg/ml	Th. mm
G	3	Z A570 24x24x24x1.75 3M G	**016002**	0.820	1.75
	3	Z A570 24x48x24x1.75 3M G	**016005**	1.090	1.75
	3	Z A570 48x24x48x1.75 3M G	**016011**	1.450	1.75
	3	Z A570 48x48x48x1.75 3M G	**016008**	1.630	1.75

	m	Description	Code	Weight kg/ml	Th. mm
HDG	3	Z A570 24x24x24x1.80 3M HDG	**016101**	0.900	1.75
	3	Z A570 24x48x24x1.80 3M HDG	**016104**	1.180	1.75
	3	Z A570 48x24x48x1.80 3M HDG	**016111**	1.540	1.75
	3	Z A570 48x48x48x1.80 3M HDG	**016107**	1.800	1.75

	m	Description	Code	Weight kg/ml	Th. mm
SS304L	3	Z A570 24x24x24x1.50 3M SS304L	**316003**	0.717	1.50
	3	Z A570 24x48x24x1.50 3M SS304L	**316006**	0.956	1.50
	3	Z A570 48x48x48x1.50 3M SS304L	**316009**	1.430	1.50

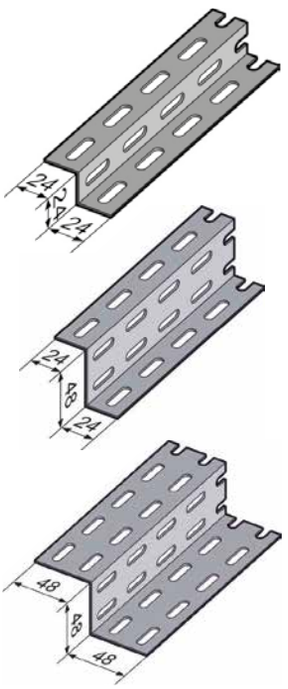

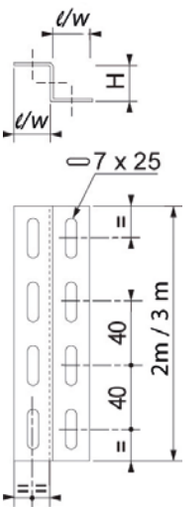

OMEGA PROFILE

A575 OMEGA - 3M

	m	Description	Code	Weight kg/ml	Th. mm
G	3	O A575 24x24x24x1.75 G	**017002**	1.360	1.75
	3	O A575 24x48x24x1.75 G	**017005**	1.630	1.75
	3	O A575 48x48x24x1.75 G	**017008**	2.190	1.75

	m	Description	Code	Weight kg/ml	Th. mm
HDG	3	O A575 24x24x24x1.80 HDG	**017051**	1.505	1.75
	3	O A575 24x48x24x1.80 HDG	**017054**	1.800	1.75
	3	O A575 48x48x24x1.80 HDG	**017057**	2.480	1.75

	m	Description	Code	Weight kg/ml	Th. mm
SS304L	3	O A575 24x24x24x1.50 SS304L	**317002**	1.180	1.50
	3	O A575 24x48x24x1.50 SS304L	**317005**	1.420	1.50
	3	O A575 48x48x24x1.50 SS304L	**317008**	1.910	1.50

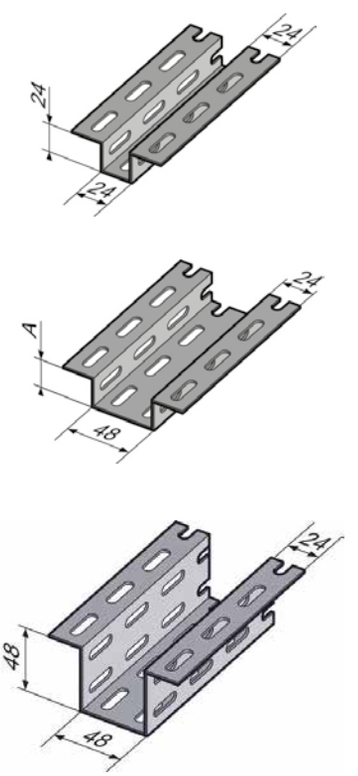

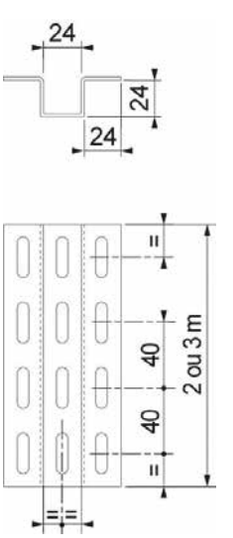

OMEGA DISTANCE SUPPORT

PO OMEGA DISTANCE SUPPORTS

	p	Description	Code	Weight kg/p	Th. mm	A mm	B mm	C mm
G	10	PO 40x 80x40x2.50 G	**040216**	0.190	2.50	42.5	85.0	45
	10	PO 40x120x40x2.50 G	**040217**	0.220	2.50	42.5	125.0	45
	10	PO 40x160x40x2.50 G	**040218**	0.250	2.50	42.5	165.0	45
	10	PO 40x200x40x2.50 G	**040219**	0.280	2.50	42.5	205.0	45
	10	PO 40x320x40x2.50 G	**040222**	0.380	2.50	42.5	325.0	45
	10	PO 40x400x40x2.50 G	**040224**	0.440	2.50	42.5	405.0	45
	10	PO 40x520x40x2.50 G	**040227**	0.530	2.50	42.5	525.0	45
	10	PO 40x600x40x2.50 G	**040229**	0.590	2.50	42.5	605.0	45

	p	Description	Code	Weight kg/p	Th. mm	A mm	B mm	C mm
HDG	10	PO 40x 80x40x2.50 HDG	**040230**	0.200	2.50	42.5	85.0	45
	10	PO 40x120x40x2.50 HDG	**040231**	0.230	2.50	42.5	125.0	45
	10	PO 40x160x40x2.50 HDG	**040232**	0.260	2.50	42.5	165.0	45
	10	PO 40x200x40x2.50 HDG	**040233**	0.300	2.50	42.5	205.0	45
	10	PO 40x320x40x2.50 HDG	**040236**	0.390	2.50	42.5	325.0	45
	10	PO 40x400x40x2.50 HDG	**040238**	0.460	2.50	42.5	405.0	45
	10	PO 40x520x40x2.50 HDG	**040241**	0.560	2.50	42.5	525.0	45
	10	PO 40x600x40x2.50 HDG	**040243**	0.620	2.50	42.5	605.0	45

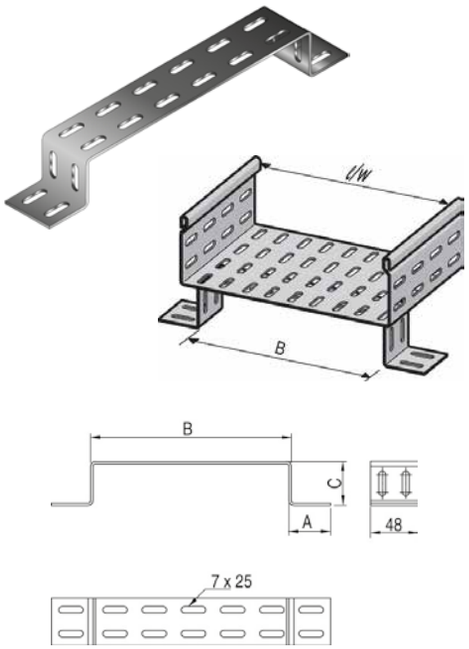

Stainless Steel and Aluminium finishes on request

A603 PROFILE

A603 L - 3M

	m	Description	Code	Weight kg/ml	Th. mm
G	3	L A603 45x45x3.00 3M G	**019020**	1.750	3.00
	3	L A603 90x45x3.00 3M G	**019021**	2.660	3.00
	3	L A603 130x45x3.00 3M G	**019022**	3.480	3.00

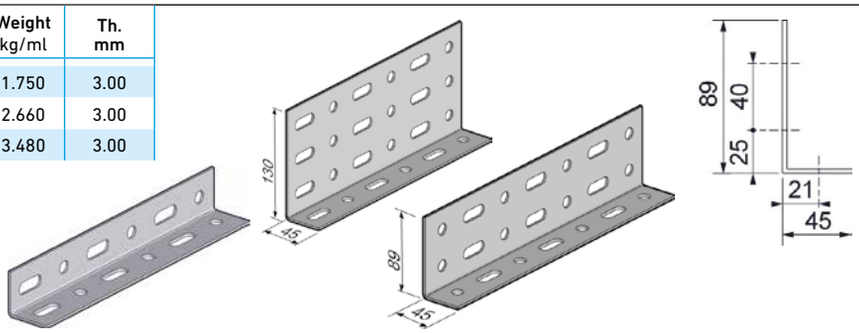

A603 U - 3M

	m	Description	Code	Weight kg/ml	Th. mm
G	3	U A603 50x45x3.00 3M G	**019010**	2.570	3.00

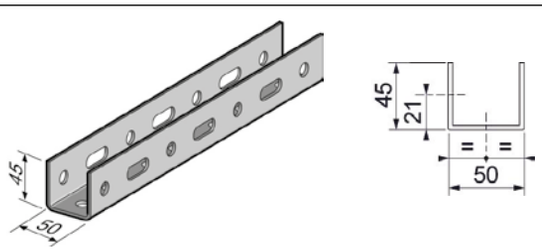

A603 Z - 3M
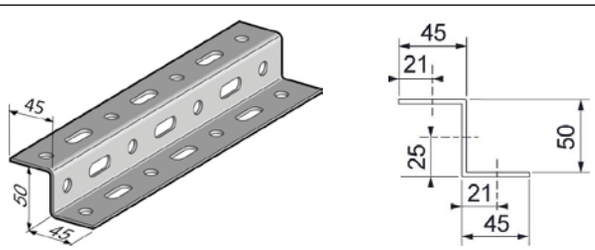
	m	Description	Code	Weight kg/ml	Th. mm
G	3	Z A603 45x50x45x3.00 3M G	**019030**	2.670	3.00